GRUSHNITSKIY, I.V.

Directions for working out methods for faster germination of ginseng seeds. Bot.zhur.41 no.7:1021-1023 Jl '56. (MLRA 9:10)

1.Botanicheskiy institut imeni V.L.Komarova Akademii nauk SSSR.
(Ginseng) (Germination)

GRUSHVITSKIY, I.V., kandidat biologicheskikh nauk (Leningrad)

Valley of epiphytes. Priroda 45 no.6:103-105 Je '56. (MLRA 9:8)

1. Botanicheskiy institut imeni V.L. Komarova Akademii nauk SSSR.
(Suifun Valley--Symbiosis)

GRUSHVITSKIY, I., kandidat biologicheskikh nauk.

It happens that there are seafaring seeds. IUn. nat. no.2:37 F '57.
(Entada) (MLRA 10:6)

GRUSHVITSKIY, I., kand.biol.nauk

Visiting the Korean pioneers. IUn. nat. no.7:34 Jl '58. (MIRA 11:9)

(Kaesong region, Korea--Description and travel)

GRUSHVITSKIY, I.V.

Experiments in greehouse cultivation of ginseng. Trudy Bot.inst. ser.6 no.7:333-336 '59. (MIRA 13:4)

1. Botanicheskiy institut im. V.L.Komarova AN SSSR (BIN), Leningrad.
(Ginseng) (Greenhouse plants)

GRUSHVITSKIY, I.V.

Biology of wild ginseng. Bot.zhur. 44 no.12:1694-1703 D '59. (MIRA 13:4)

1. Botanicheskiy institut im. V.L.Komarova Akademii nauk SSSR, Leningrad.
(Far East--Ginseng)

BELIKOV, I.F.; IM ROK ZE; GRUSHVITSKIY, I.V.; KHON YEN

Preliminary results of studies on seed stratification and the light regimen of ginseng. Mat. k izuch. zhen'shenia i lim. no.4:97-104 '60. (MIRA 13:9)

1. Dal'nevostochnyy filial Sibirskogo otdeleniya AN SSSR, Botanicheskiy institut AN SSSR i Akademiya nauk Koreyskoy Narodno-Demokraticheskoy Respubliki.
(GINSENG) (SEEDS) (PLANTS, EFFECT OF LIGHT ON)

GRUSHVITSKIY, I.V.; RAZUMOV, S.A.; MAKAROV, P.V., nauchnyy red.; VOROB'YEV, G.S., red.izd-va; GURDZHIYEVA, A.M., tekhn.red.

[Biology and religion] Biologiia i religiia. Leningrad, Ob-vo po rasprostraneniiu polit. i nauchn.znanii RSFSR. Leningr.otd-nie, 1960. 70 p. (MIRA 13:7)

1. Chlen-korrespondent AMN SSSR (for Makarov).
(Biology) (Religion)

GRUSHVITSKIY, I.V.

Development of ginseng and methods of studying it. Mat. k izuch. zhen'shenia i lim. no.4:16-25 '60. (MIRA 13:9)

1. Botanicheskiy institut im. V.L. Komarova AN SSSR.
(GINSENG)

GRUSHVITSKIY, I.V.

Accelerated germination of ginseng seeds. Mat. k izuch. zhen'shenia i lim. no.4:26-38 '60. (MIRA 13:9)

1. Botanicheskiy institut im. V.L. Komarova AN SSSR.
(GINSENG) (GERMINATION)

GRUSHVITSKIY, I.V.

A rare case of prolification and fasciation of aerial ginseng shoots. Mat. k izuch. zhen'shenia i lim. no.4:240-243 '60. (MIRA 13:9)

1. Botanicheskiy institut im. V.L. Komarova AN SSSR.
(GINSENG) (ABNORMALITIES (PLANTS))

GRUSHVITSKIY, Igor' Vladimirovich; FEDOROV, Al.A., doktor biol. nauk, prof., otv. red.; LEVINA, M.D., red.; VOLCHOK, K.M., tekhn. red.

[Ginseng; problems of biology] Zhen'shen'; voprosy biologii. Vladivostok, Akad. nauk SSSR, Dal'nevostochnyi filial, 1961. 342 p. (MIRA 14:12)

(GINSENG)

GRUSHVITSKIY, I.V.; LIMAR', R.S.

Accelerated germination of ginseng seeds due to the effect of ultrasonic waves. Bot. zhur. 46 no.9:1282-1285 S '61. (MIRA 14:9)

1. Botanicheskiy institut im. V.L.Komarova AN SSSR i Vsesoyuznyy institut rasteniyevodstva, Leningrad.
(Ginseng) (Germination)
(Plants, Effect of ultrasonic waves on)

GRUSHVITSKIY, Igor' Vladimirovich; TAKHTADZHYAN, A.L., prof., doktor biolog. nauk, otv.red.; VIKHREV, S.D., red.izd-va; BLEYKH, E.Yu., tekhn.red.

[Role of embryonic underdevelopment in the evolution of flowering plants] Rol' nedorazvitiia zarodysha v evoliutsi tsvetkovykh rastenii. Moskva, Izd-vo Akad.nauk SSSR. 1961 45 p. (Komarovskie chteniia, no.14). (MIRA 14:12)

(SEEDS) (PLANTS—EVOLUTION)

[illegible], M.A.; [illegible], A.V., [illegible], A.A.

Implantation of the surface shoots and leaves of ginseng. Mat. k izuch. zhen'. i drug. lek. rast. Dal'. Vost. no.5: 39-43 '63. (MIRA 17:8)

1. Botanicheskiy institut AN SSSR i Dal'nevostochnyy filial imeni Komarova Sibirskogo otdeleniya AN SSSR.

GRUSHVITSKIY, I.V.

The family Araliaceae and some biological characteristics of its representatives. Mat. k izuch. zhen'. i drug. lek. rast. Dal'. Vost. no.5:173-191 '63. (MIRA 17:8)

1. Botanicheskiy institut AN SSSR.

GRUSHVITSKIY, I.V.

Subterranean germination and the functions of cotyledons. Bot. zhur. 48 no.6:906-915 Je '63. (MIRA 17:1)

1. Botanicheskiy institut imeni V.L. Komarova AN SSSR, Leningrad.

GRUSHVITSKIY, I.V.; AGNAYEVA, Ye.Ya.; KUZINA, Ye.F.

Heterogeneity of mature carrot seeds with regard to the size of the embryo. Bot. zhur. 48 no.10:1484-1489 O '63. (MIRA 17:1)

1. Botanicheskiy institut imeni Komarova AN SSSR, Leningrad.

GRUSHVITSKIY, I.V.

Effect of gibberellin on the seed germination and development of juvenile ginseng plants. Izv. AN SSSR.Ser.biol. no.3:423-427 My-Je '65. (MIRA 18:5)

1. Botanicheskiy institut im. V.L.Komarova AN SSSR.

GRUSHVITSKIY, I.V.; LIMAR', R.S.

Effect of gibberellin on the ripening and germination of seeds with underdeveloped embryos. Bot.zhur. 50 no.2:215-217 F '65. (MIRA 18:12)

1. Botanicheskiy institut imeni V.L.Komarova AN SSSR i Vsesoyuznyy institut rasteniyevodstva, Leningrad. Submitted June 26, 1964.

GRUSHVITSKIY, I.V.

Some characteristics of the vital activities and adaptations of ancient forms of herbaceous plants. Trudy MOIP.Otd. biol. 13:34-42 '65. (MIRA 19:1)

The problem of Phanerogamae and the question of seed evolution. Ibid.:43-51

IVA[illegible]NA, L.I.; GRUSHVITSKIY, I.V.; ARKAD'YEV, G.V.; BUDKEVICH, Ye.V.; POLYANSKIY, V.I.

Setting up the museum exhibit "World vegetation according to the geobotanical regions." Bot.zhur. 41 no.5:667-680 My '56. (MIRA 10:7)
(Phytogeography--Exhibitions)

USSR/Physiology of Plants - Photosynthesis. 1.

Abs Jour : Ref Zhur - Biol., No 15, 1958, 67735

Author : Grushvitskiy, I.V., Novichkova, L.M.

Inst : Botanical Institute of the USSR Academy of Sciences.

Title : Some Data on Photosynthesis in Ginseng.

Orig Pub : Botan zh., 1957, 42, No 5, 751-756.

Abstract : In the Botanical Institute of the Academy of Sciences of USSR a face counter was used to compute the activity of fizated pulverized leaves of hothouse ginseng plants after exposing them to a $C^{14}O_2$ atmosphere, and to compute the loss of C^{14} from the gaseous mixture of the chamber. Over the course of 24 hours the change in intensity of photosynthesis was insignificant, and during vegetation it declined. The photosynthesis intensity of ginseng from the Primorskiy Kray was 1 1/2-2 times greater than that

Card 1/2

VOROB'YEV, D.P.; GRUSHVITSKIY, I.V.

Visiting the Korean People's Democratic Republic. Bot.zhur. 43 no.12:1775-1777 D '58. (MIRA 11:12)

1. Botanicheskiy institut imeni V.L.Komarova AN SSSR, Leningrad. (Korea, North--Botany)

GRUSHVITSKIY, P.V. (deceased)

USSR

The relations between chemical composition and crystal structure. P. V. Grushvitskii. *Uchenye Zapiski Leningrad. Gosudarst. Univ. Ser. Geol. Nauk* No. 178, *Sov. Geol.* No. 4, 196-238(1951).—V. M. Goldschmidt's fundamental laws of crystallochemistry concerning the role of ionic radii of the ratio r/r, the polarizability of the ions, and the deviations from purely ionic structures brought about by binding mechanisms that differ from the Coulomb electrostatic field effects are criticized and revised. Especially defects in the definition of polarization = deformation are discussed by use of the exptl. material of Fajans (*C.A.* 23, 2000) and Wulf and Cameron (*C.A.* 25, 858) on the optical properties of layer structures and mol. compds., but not for the complex interrelations of polarization to coördination. Another important defect of Goldschmidt's crystallochemistry is the impossibility of explaining sufficiently the stability of structures from coördination principles only. The calcn. of lattice energies (e.g. from Kapustinskii's approximation formula), and particularly the theory of coördination and energy of formation of complex compds. brings about many unsolved problems, e.g. in the fact that the very similar cations Ni^{++} and Mg^{++} differ so greatly in complex-formation nature; also, the polarization theory is unable to overcome similar difficulties, e.g. the quadratic coördination of Pt^{++}, etc.

Chair of Crystallography, Leningrad State Univ.

O.V. Krushvitskii 5

This latter type of coördination is also observed in the structure of cooperite, PtS, and is entirely in contradiction to the postulates of Goldschmidt's theory, because of the pronounced covalent character of the binding mechanisms. Also, Goldschmidt's expectation that stronger polarization in a crystal structure brings about a decrease in coördination nos. is not completely correct, e.g. for the series of oxides, sulfides, selenides, and tellurides. Although polarization effects may suffice to explain the different structures of NaCl and NiAs because of their very different ions, the same principle is not easily used to explain the wurtzite-sphalerite problem in which both modifications of the same compd. also have the same coördination principles. Many characteristic facts that are contradictory to Goldschmidt's laws are demonstrated in the general phenomenon of morphotropy and isomorphism that also cannot be overcome by the consideration of polarization of ions. Difficulties in the problem of analogies between Si^{4+} and Ti^{4+} are likewise discussed.

W. Eitel

2/2

L 56510-65 EWT(d)/EED-2/EWP(1) Pq-4/Pg-4/Pk-4/Pl-4 IJP(c) MB/GG

ACCESSION NR: AP5016773 UR/0286/65/000/010/0087/0088 44
681.142.621 43 B

AUTHOR: Grushvitskiy, R. I.; Smirnov, N. A.; Smolov, V. B.; Shmidt, V. K.; Fomichev, V. S.

TITLE: A precision voltage-to-code converter. 16 Class 42, No. 171182

SOURCE: Byulleten' izobreteniy i tovarnykh znakov, no. 10, 1965, 87-88

TOPIC TAGS: voltage to code converter, computer component, computer technology, voltage divider

ABSTRACT: This Author's Certificate introduces a precision voltage-to-code converter constructed according to the method of sequential comparison with a single standard, subtraction, multiplication by two, and storage of the result. Conversion accuracy is improved by making the storage circuit in the form of two digital counting systems with balancing by digital places. The weight of each least significant digit in the counting systems is greater than the weight of the steps of the preceding least significant digit. The output of one of the counting systems is connected through a pulsed voltage divider to two comparison circuits for voltage

Card 1/3

L 56510-65

ACCESSION NR: AP5016773

multiplication. The input voltage is fed to the second input of one comparison circuit while the second input of the other comparison circuit is connected to the output of the second digital counting system. This output is connected to the first input of a third comparison circuit, and to a fourth and fifth comparison circuit through a standard source for subtraction of the reference voltage. The second input of the third comparison circuit is connected to the output of the first counting system. The second input of the fourth and fifth comparison circuits are connected respectively to the input voltage and to the output of the first digital counting system.

ASSOCIATION: Leningradskiy elektrotekhnicheskiy institut im. V. I. Ul'yanova (Lenina) (Leningrad Electrical Engineering Institute)

SUBMITTED: 16Dec63 ENCL: 01 SUB CODE: DP

NO REF SOV: 000 OTHER: 000

Card 2/3

L 56510-65

ACCESSION NR: AP5016773

ENCLOSURE: 01

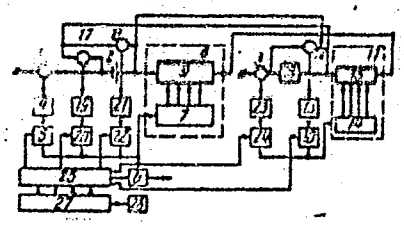

Fig. 1. 1, 3, 12, 17 and 18--comparison circuits; 2--standard source; 4, 13, 19, 21 and 23--amplifiers; 5, 6, 10, 20, 22 and 24--logic circuits; 7 and 14--control circuits for the digital counting systems; 8 and 11--digital counting systems; 9 and 15--code-to-voltage converters; 16--pulsed voltage divider; 25--control unit; 26--pulse generator; 27--synchronization unit

Card 3/3

GRUSIN, YA. E.

USSR/ Engineering - Metal Surfaces

Card 1/1 Pub. 22 - 13/40

Authors : Grusin, Ya. E., and Ovcharenko, N. N.

Title : Metal surfaces at high temperatures

Periodical : Dok. AN SSSR 99/3, 389-390, Nov 21, 1954

Abstract : Experiments intended to determine the state of metal surfaces at high temperatures (800 - 950°C) are described. The experiments were conducted on copper samplings. The surface properties of the samples under the temperatures mentioned are also described. Four Russian references (1936-1952). Illustrations.

Institution: Kharkov State University A. M. Gorkiy

Presented by: Academician N. V. Belov, June 7, 1954

PA - 2779

AUTHOR: GRUSIS, A. YA.

TITLE: ~~On the~~ Shape of the Trunks of Fir Trees on Forest Soil. (O forme stwola sosen proisrastauschjch na osuschennich lesoutschastkach Latwiiskai, Russian).

PERIODICAL: Latvijas PSR Zinatnu Akad. Westis, 1957, Vol 1, Nr 3 (116), pp 77 - 82 (U.S.S.R.)
Received: 5 / 1957 Reviewed: 6 / 1957

ABSTRACT: It was found that the growth of fir trees with respect to height and diameter increases markedly on dry ground, a fact, which is accompanied by a change in the appearance of the trunk. M.P.ELPATJEWSKII calls fir trunks grown on dry ground heavy-timber fiber (q = 0,70 - 0,80). MULTAMJAKI (Finland) comes to the conclusion that the shapes of trunks is inferior in the case of firs grown on marshy soil than that of firs grown on mineral soil.

The data of the papers mentioned were taken from plantations (187 trees) situated on ground which was drained 20 years ago. Table (1) shows that tapering of trunks was observed to be greater in value than according to tables hitherto in use.

Observations concerning the rate of tapering of trunks are condined to trees with a height of between 8 and 20 meters. For this reason no generalized theorems can be deduced from this investigation and only observed values are given. Table (1) shows that in the case of dry

Card 1/2

PA - 2779

On the Shape of the Trunks of Fir Trees on Forest Soil.

ground tapering is less marked. Trunks with a smaller degree of tapering in their lower part usually taper off faster in their upper parts.

Conclusions: 1) The height measures found on the fir trees under consideration are of greater absolute importance than the tables concerning tapering. 2) The form coefficients q_1 and q_2 are greater in the case of dry soil, but the form coefficient q_3 is smaller than those given in the tables for tapering. 3) Tapering of trunks is smaller in the lower part of the trunks up to a height of 5 meters, but beyond that height it is greater than the values given in the tapering tables. 4) The modification of the shape of trunks growing on dry soil results in a reduction of the tapering value.
(6 tables and 5 citations from Slav publications)

ASSOCIATION: Hydrotechnical Research Institute.
PRESENTED BY:
SUBMITTED:
AVAILABLE: Library of Congress.

Card 2/2

SEICHTER, A., dr.; GRUSON, G., prof., dr., ing.

Methods of petrographic coke analysis. Hut listy 18 no.2:77-80 F '63.

1. DBI, Freiberg, Sachsen.

SCHEIDIG, K., inz. (Nemecka demokraticka republicka); GRUSON, G., prof., dr., inz. (Nemecka demokraticka republicka)

Dynamic method of coke reactivity measurement. Hut listy 18 no.4: 229-231 Ap '63.

GRUSOVA, E

5

Photometric determination of tantalum and niobium in steel with the use of pyrogallol. E. Grusová (Ocelářský výzkumný ústav, Prague). *Hutnické listy* 12, 730-8(1957). —Dissolve steel in HCl and HNO_3 and ppt. Ta and Nb by hydrolysis with H_2SO_4. Dissolve in H_2SO_4 and HNO_3 and reppt. with NH_4OH. Mo remains in soln. Ppt. Fe, Cr, etc., with H_2SO_4. Fuse the oxides with $K_2S_2O_7$ and det. photometrically by use of pyrogallol. Petr Schneider

Chem

GRUSS, J.

Gruss, J.

Complete mechanization of the harvesting of straw. p. 208.

Vol. 5, no. 11, June 1955
MECHANISACE ZEMEDILSTVI

SO: Monthly List of East European Accession, (EEAL), LC, Vol. 4, No. 9, Sept. 1955, Uncl.

CZECHOSLOVAKIA UDC 631.3:613.644

GRUSS, Koloman; Research Institute of Hygiene of Work and of Occupational Diseases (Vyskumny Ustav Hygieny Prace a Chorob z Povolania), Bratislava, Director (Riaditel) Prof Dr M. NOSAL.

"Hygienic Characteristic of the Noise Produced by Agricultural Machinery."

Prague, Pracovni Lekarstvi, Vol 18, No 6 - 7, Aug 66, pp 304-308

Abstract /Author's English summary modified/: The noise produced by the tractors type Zetor 3011, Zetor 50 Super, Zetor 25K, Zetor 25 A, Zetor 35 Super, the implement carrier RS 09, the track layer DT 54 were measured for 18 hours. In all of these machines the noise exceeds the permissible level of 80 dB + 5 dB. The investigation revealed that only an engineering design change can reduce the noise to a proper level. 7 Figures, 1 Western, 6 Czech references. (Manuscript received 20 Nov 65).

1/1

43292

S/135/62/000/012/002/015

A006/A101

Grusser, E.

AUTHORS: Alov, A. A., Professor, Doctor of Technical Sciences, Engineer

TITLE: On the mechanism of interaction between aluminum oxide and flux in welding of aluminum

PERIODICAL: Svarochnoye proizvodstvo, no. 12, 1962, 5 - 9

TEXT: According to literature concepts, chlorine and fluorine, formed during the dissociation of flux components, interact with aluminum. This process is accompanied by the formation of $AlCl_3$ and AlF_3. The latter are sublimated. This promotes the tearing of the oxide film off the metal and its being carried away by the flux. However, the mechanism of flux absorption by Al_2O_3 was not revealed. The authors attempted to investigate this process in a series of experiments. The interaction of free Al-oxide with fluxes I [(NaCl+KCl)equiv.+ + 25 weight % Na_3AlF_6] and II [(NaCl+KCl)equiv.] was studied by heating a mixture of these materials in corundise crucibles and holding it at 900 - 1,000°C for 5 minutes. After cooling, sections were cut from the flux ingots. The be-

Card 1/3

havior of surface oxide films on welded Al plates was investigated in automatic submerged-arc welding with a tungsten electrode, using the same fluxes. To investigate the transfer of the oxide film from the electrode wire, automatic arc-hardfacing was performed on a water-cooled copper backing plate. The behavior of Al oxide in automatic arc welding with consumable electrodes and fluxes I and II was investigated in butt welding 5 mm thick АД 1 (AD1) Al plates. The following results were obtained. Chlorine and fluorine salt-base fluxes do practically not dissolve aluminum oxides in arc welding. Al oxide (oxide films) are transferred into the flux-slag in the form of mechanically suspended α-Al_2O_3 particles. In welding with cryolite containing fluxes, the Al oxide in the slag is distributed relatively uniformly. In fluxes, composed of chlorine salts, the accumulation of Al oxides in the upper section of the slag crust was observed. This distribution of Al oxide is due to the fact that fluxes, containing fluorine compounds, interact chemically with aluminum, and gaseous aluminum fluorides are formed. The latter break up the oxide film and bring about their uniform distribution. Fluxes composed of chlorine salts show low chemical activity and the oxide films are mechanically removed by the slag. Under intensified welding conditions with fluxes, containing fluorine compounds, aluminum sub-fluoride,

AlF, is formed; its decomposition after cooling of the slag is accompanied by the singling-out of fine-dispersed aluminum particles. The structure of the slags shows their undulating displacement during the welding process. There are aluminum inclusions in the slag which represent clogged molten metal splashes. There are 1 figure and 1 table.

ASSOCIATIONS: MATI (Alov) and GDR (Grusser)

ALOV, A.A., doktor tekhn.nauk, prof.; GRUSSER, E., inzh. (Germanskaya Demokraticheskaya Respublika)

Automatic are welding of aluminum under flux with supply of a jet of oxygen. Svar. proizv. no.2:8-10 F '63. (MIRA 16:2)

1. Moskovskiy aviatsionnyy tekhnologicheskiy institut.
(Aluminum--Welding)

GRUST, W.

For better work in purchasing. p. 2

ROLNIK SPOKDZIELCA. (Centrala Rolniczej Spolkzielni "Sampopomoc Chlopska") Warszawa, Poland. Vol. 8, no, 43, Oct. 1955.

Monthly list of East European Accessions (EEAI) LC, Vol. 9, no. 2, Feb. 1960

Uncl.

C 4 GRUSE, E.

Decomposition of organic substances by sulfuric acid nitric acid mixture in microanalytical investigations Oskar Szép and Éva Gruse (Univ. Debrecen, Hung.) *Magyar Kém. Folyóirat* 56, 318-23 (1950). The org. substance (veg. table or animal foods, organ samples, etc.) is heated in a 100-ml. Kjeldahl flask with 1 ml. concd. H_2SO_4 and varying amts. of concd. HNO_3. The amt. of HNO_3 should be varied, according to the fat content of the sample, from 1 to an equal vol. of the sample. One g. concd. H_2SO_4 is usually sufficient to decomp. 30 g. human or animal organ (excepting substances contg. much fat such as bones and feces); the amt. of HNO_3 required ranged from 18 to 23 ml. When decompg. 20-30 ml. urine, 1 ml. H_2SO_4 and 2-3 ml. HNO_3 are used. For 1 g. of hair and nails 3.5 to 5.5 ml. HNO_3 and 1 ml. H_2SO_4 should be used. In the case of org. samples very rich in fat, a 10 g. sample must be treated with 5 ml. HNO_3 without any H_2SO_4 until fat accumulates on the surface of the liquid. Then the liquid is decanted and the fat decompd. by adding 1 ml. H_2SO_4 and heating. The modified method makes superfluous the use of other oxidizing agents such as H_2O_2, $HClO_4$, fuming HNO_3. The liquid thus obtained is suitable for the direct detn. of Ag, Bi, Cu, Cd, Cr, Zn, Tl, Sb, As, and Sn, but unsuitable for the detn. of Hg, Pb, and Ba. Both latter metals ppt. when the H_2SO_4 soln. is dild. The ppt. can be used for detg. Pb and Ba detd. by the usual methods. 20 references.

Istvan Finaly

GRUSZ, E.

Hungarian Technical Abst.
Vol. 6 No. 1
1954

3 (6) 669.71.017 : 546.72

74. **Comparative researches on the photometric determination of iron in aluminium and aluminium alloys** — *Összehasonlító vizsgálatok a vas fotométeres meghatározására alumíniumban és alumíniumötvözetekben* — L. Mázor and E. Grusz. (Aluminium — *Kohászati Lapok, Aluminium* — Vol. 5, 1953, No. 2, pp. 25—31, 6 figs., 2 tabs.)

Methods used for the photometric determination of iron have been investigated with a view to establish which is the most suitable for measuring the iron content of pure and alloyed aluminium. It was evident from the investigations that α-α' dipyridyl, ortho-phenanthroline and potassium rhodanide — the latter especially in a solution containing 50% by volume acetone — were adequate for the determination. Sulphosalicylic acid in an alkaline solution can only be used up to a limited aluminium content while dimethylglyoxime, 7-iodo-8-oxyquinoline-5-sulphonic acid and thioglycolic acid were found unsuitable for the above purpose primarily because of the disturbing effect of the aluminium ion. For determining the iron content of aluminium alloyed with copper or nickel dipyridyl and the phenanthroline-iron (II) complex proved best. *L. M.*

GRUSZCZY, Tadeusz

Chemical Abstracts
May 25, 1954
Foods

A critical evaluation of the Monier-Williams method in determining sulfur dioxide in food products. Tadeusz Gruszczyński and Elżbieta Słomińska-Czyżowa. *Roczniki Państwowego Zakładu Hig.* 1953, 115-20; cf. *C.A.* 21, 2742.—This method is recommended. The SO_2 is detd. by passing CO_2 in the acid medium (contg. SO_2) which is oxidized by means of 3% H_2O_2 to H_2SO_4. J. S. J.

1ST AND 2ND ORDERS

3RD AND 4TH ORDERS

PROCESSES AND PROPERTIES INDEX

20

CA

Effect of drying conditions on hydraulic properties of powdered blast-furnace slags. Hubert Grusczyk. *Cement* (Warsaw) 4, 80-2(1948). The characteristics of portland cements made of 75%, slag, 23%, cement, and 2%, gypsum were detd. by varying their temp. and time of drying, and cooling methods. The following conclusions relative to hydraulic properties of slags were reached: (1) drying temp. up to 400° favorably affected their compressive and flexural strengths; (2) drying at 400-700° caused a drop in flexural strength and in the initial compressive strength; (3) longer drying decreased flexural and delayed compressive strength; (4) compressive strength after 28 days was not affected by drying time and temp. not exceeding 700°; (5) slag dried above 700° lost its hydraulic properties to a large extent. T. R. Zegree

ASM-SLA METALLURGICAL LITERATURE CLASSIFICATION

GRUSZCZYK, HUBERT

Bolewski, Andrzej.

Surowce hutnicze. Kraków, Nakł. Państwowego Wydawn. Naukowego, 1951.

2 v. diagrs. 29 cm.

At head of title: Akademia Górniczo-Hutnicza w Krakowie. Andrzej Bolewski i Hubert Gruszczyk.

1. Mineralogy. I. Gruszczyk, Hubert, joint author. II. Title.

QE363.B6 53-44528

Library of Congress (2)

Bolewski, Andrzej.; Raw Materials for the Metal Industry

Gruszczyk, H.

Some paragenetic assemblages of barite. H. Gruszczyk (Coll. Mining and Met., Kraków). *Przegląd Geol.* 1, 357-62 (1953).—Microscopic examns. revealed in a certain barite vein 3 different paragenetic assemblages of barite, i.e., barite-sulfide (I), barite-fluorite (II), barite-quartz (III). Chem. compns. of I, II, III are, resp.: SiO_2 0.02, 0.06-1.78, 2.34; $Al_2O_3 + Fe_2O_3$ 0.10, 0.24-1.43, 0.16; CaO —, 5.72-27.99, trace; SrO 0, 0-0.13, trace; BaO 64.48, 38.47-59.11, 64.10; SO_3 33.51, 20.28-31.33, 33.34; H_2O 0.20, 0.12-0.26, 0.11; F_2—, 3.91-18.92, — %. The following constituents were found in I only: Fe 0.10, S 0.20, Pb 0.16, Cu 0.095%. The genetic sequence is I, II, III. The barite assemblages crystd. in a dislocation fissure, which opened gradually. Jan Burchart

2

4

GRUSZCZYK, H.

"Organization of Geological Research Work on Metal Ores." p.40
(PRZEGLAD GEOLOGICZNY No. 1/2, Jan./Feb. 1954 Warszawa, Poland)

SO: Monthly List of East European Accessions, LC, Vol. 3, no. 5, May 1954, Uncl.

GRUSZCZYK, H.

Search for mineral raw material in the Carpathian Mountains; a summary of a report.

P. 459, (Przeglad Geologiczny, Vol. 4, no. 10, Oct. 1956, Warszawa, Poland)

Monthly Index of East European Accessions (EEAI) LC. Vol. 7, no. 2, February 1958

GRUSZCZYK, H.

Remarks concerning some views about the origin of the Silesian-Krakovian zinc and lead deposits. p.319.

(PRZEGLAD GEOLOGICZNY. Vol. 5, No. 7, July 1957. Warszawa, Poland)

SO: Monthly List of East European Accessions (EEAL) LC. Vol. 6, No. 10, October 1957. Uncl.

POLAND/Cosmochemistry. Geochemistry. Hydrochemistry. D

Abs Jour: Ref Zhur-Khim., No 24, 1958, 81147.

Author : Gruszczyk H.
Inst :
Title : Evidence of Copper Mineralization in the Strate of Carpatian Flysch.

Orig Pub: Przegl. geol., 6, No 4, 174-179.

Abstract: Based on the data given in literature as well as on verbal reports the information pertaining to Cu-mineralization of the Carpatian flysch found in Poland are presented herein. It is indicated that the greatest evidence occurs in the zones of oxidation and cementation and that the Cu-bearing minerals (such as malachite, cuprite, chalcosin, chalcopyrite, azurite, and often the free copper)

Card : 1/2

POLAND/Cosmochemistry. Geochemistry. Hydrochemistry. D

Abs Jour: Ref Zhur-Khim., No 24, 1958, 81147.

are basically of the secondary origin (sic). However, a possibility of finding ores of the primary industrial importance is not excluded.
A. Yegorkin.

Card : 2/2

GRUSZCZYK, H.

"The dislocation of mining deposits, their classification and description of formation" by S.A. Vakhromeev. Reviewed by H. Gruszczyk. Przegl geolog 10 no.2F: 62

GRUSZCZYK, H.

A conference under the slogan "Science and Life". Przegl geolog 10 no.2 :3 of cover F '62.

CHRZYCZYK, Hubert

Remarks on the discussion on the genesis of the copper ore deposit in Miedziana Gora. Przegl geol 11 no.10:446-447 O'63.

1. Akademia Gorniczo-Hutnicza, Krakow.

LUTOMSKA, Ksenia, prof. dr. med.; KONINSKA, Danuta; GRUSZCZYNSKA, Kry:

Prevention of dental caries in children with "Fluodar" tablets. Pol. tyg. lek. 19 no.50:1930-1931 14 D '64

1. Z Zakladu Stomatologii Zachowawczej Akademii Medycznej w Gdansku (Kierownik: prof. dr. med. K. Lutomska).

GRUSZCZYNSKA, M.; GABRYEL, P.

Severe course of Wasiljew-Weil's disease with lesions of the sympathetic nervous system. Polski tygod.lek. 10 no.17:553-555 25 Apr 55.

1. Z Oddzialu Zakaznego Szpitala Miejskiego w Paznaniu; kierownik; dr med. J.Zachradnik i z Zaklaud Anatomii Patologicznej A.M. w Poznaniu;kierownik;prof.dr med. J.Groniowski.

(WEIL'S DISEASE, complications, sympath. nerv. system lesion, diag.)
(SYMPATHETIC NERVOUS SYSTEM, in various diseases, Weil's dis., diag.)

GRUSZCZYNSKA, M.

35

POLAND

KULERZA, Aleksandra; Department of Epidemiology (Zaklad Epidemiologii), PZH (Panstwowy Zaklad Higieny -- State Institute of Hygiene), Director: Prof Dr J. KOSTRZEWSKI, Head of the Institute: Prof Dr F. PRZESMYCKI; with the collaboration of J. GOLEA, T. JOPKIEWICZ, M. MACPRZAK, W. KOCIELSKA, M. KOPEC, K. LIPINSKA, R. LUTYNSKI, J. MAKAREWICZ, H. MALYSZKO, K. NEYMAN, A. OLES, S. PESKA, K. POPIELEWICZ, T. RODKIEWICZ, J. ROZWADOWNA, W. SOCZEWICA, S. SZCZESNIAK, D. ZOLNIERZOWA all of the Wojewodztwo Health and Epidemiological Stations (Wojewodzkie Stacje Sanitarno-Epidemiologiczne); H. BOBROWSKI, A. GECOW, J. GELBER, M. GRUSZCZYNSKA, H. JASTRZEBSKA, E. JUZWA, J. KUROCZKIN, Z. RESZKE, R. STANCZYK, J. SYGNATOWICZOWA, Z. SZCZERSKA, K. SZCZYGIELSKI, S. SZYNDLAR, K. SWICOWA, J. WAJSZCZUK, R. WARZECHA all of the Departments of Poliomyelitis Patients (Oddzialy dla Chorych na Poliomyelitis) of the Wojewodztwo Health and Epidemiological Stations; J. ADAMSKI (Poznan), H. DOBROWOLSKA (Warsaw), J. BOCHENSKA (Lodz), M. KOENIG (Krakow); H. DOBROWOLSKA of the Department of Virology (Zaklad Wirusologii) of PZH,

1/2

POLAND

Director: Prof Dr F. FRZESMYCKI, technical aid: A. BAGINSKA

"Epidemic Situation of Poliomyelitis in Poland in 1961"

Warsaw, Przegląd Epidemiologiczny, Vol XVI, No 4, 1962, pp369-375.

Abstract: /Authors' English summary modified/ The profound influence on the epidemiology, etiology and clinical picture of poliomyelitis of the introduction of mass immunization with attenuated polio vaccines in 1959 is discussed. Observations on the influence and effect of immunizations with such vaccines on the epidemic situation of poliomyelitis in Poland are reported. 4 tables, 2 diagrams; 5 Polish references.

2/2

APPROVED FOR RELEASE: 08/10/2001 CIA-RDP86-00513R000617120014-9"

GRUSZCZYNSKI, Cz.

Poland/Chemical Technology - Chemical Products and Their Application. Lacquers. Paints. Drying Oils. Siccatives, L-22

Abst Journal: Referat Zhur - Khimiya, No 19, 1956, 63312

Author: Gruszczynski, Czeslaw

Institution: None

Title: Technology of Printing Ink Manufacture

Original Periodical: Jak powstaje farba dzielowa. Poligrafika, 1954, No 6, 7-11; Polish

Abstract: Description of the technology of manufacture of black printing ink, including a characteristic of the starting raw materials (carbon black, linseed oil, synthetic resins, various additives).

Card 1/1

GRUSZCZYNSKI, Czeslaw

What is "flushing"? Poligrafika 13 no.10:9-13. O '61.

GRUSZCZYNSKI, Donat, mgr., inz.

Farnborough 1961; reflections on aeronautical propulsion.
Techn lotn 17 no.3:80-91 '62.

GRUSZCZYNSKI, Emil; HRUBAN, Andrzej; MALIKOWSKA, Halina

Obtaining silver of high purity. Przegl elektroniki 3 no.12:681-682 D '62.

1. Przemyslowy Instytut Elektroniki, Warszawa.

GRUSZCZYNSKI, Emil

Preparation of extremely-high-purity selenium and tellurium.
Przegl elektroniki 4 no. 5/6: 313-314 My-Je '63.

1. Przemyslowy Instytut Elektroniki, Warszawa.

GRUSZCZYNSKI, Emil; PATAJ, Kazimierz

Technology of indium antimonide for Hall generators. Przegl elektroniki 4 no.12:701-702 D '63.

1. Przemyslowy Instytut Elektroniki, Warszawa.

Gruszczynski, J

Krotki Zbior Wiadomosci O Gazie Swietlnym; Do Uzytku Laboratoryjnego /Short summary of information on Illumination Gas; for laboratory use/ Warszawa, Panstowe Wydawnictwa Techniczne, 1950.

131 P. Illus., Tables.

551./6
614.82
.G8

ZAREBA, Jerzy; GRUSZCZYNSKI, Jan

Fetal ichthyosis. Case report. Polski tygod.lek. 15 no.34: 1315-1317 22 Ag '60.

1. Z Kliniki Chorob Dzieci Sl. A.M. w Zabrzu; kierownik: prof. dr med. A. Chwalibogowski.
(ICHTHYOSIS in infancy & childhood)
(INFANT, NEWBORN dis.)

GRUSZCZYNSKI, Jan; KRAUZE, Mieczyslaw; ZABEBA, Jerzy

Congenital ichthyosis in the light of our observations. Pol. tyg. lek. 19 no.33:1284-1285 17 S '64.

1. Z Kliniki Chorob Dzieci Slaskiej Akademii Medycznej w Zabrzu; kerownik: prof. dr. med. Artur Chwalibogowski [deceased]).

SWIERCZYNSKA, Zdzislawa; WOZNICZKO-ORLOWSKA, Genowefa; ZAREBA, Jerzy; GRUSZCZYNSKI, Jan

Role of antibodies against bovine proteins in children. Pol. tyg. lek. 19 no.49:1876-1877 7 D '64

1. Z Zakladu Mikrobiologii Slaskiej Akademii Medycznej w Zabrzu-Rokitnicy (kierownik: prof. dr. mgr. Jerzy Szaflarski) i z Kliniki Chorob Dzieci Slaskiej Akademii Medycznej w Zabrzu (kierownik: prof. dr. med. Artur Chwalibogowski [deceased]).

ZAREBA, Jerzy; GRUSZCZYNSKI, Jan; SWIERCZYNSKA, Zdzislawa; WOZNICZKO-ORLOWSKA, Genowefa

Effect of eliminating diet on the level of antibodies to bovine proteins. Pol. tyg. lek. 20 no.15:507-508 12 Ap '65.

1. Z Kliniki Chorob Dzieci Slaskiej AM w Zabrzu (Kierownik: prof. dr. med. Artur Chwalibogowski [deceased]) i z Zakladu Mikrobiologii Slaskiej AM w Zabrzu--Rokitnicy (Kierownik: prof. dr. mgr. Jerzy Szaflarski).

COUNTRY : POLAND
CATEGORY : Chemical Technology. Chemical Products and Their Applications. Carbohydrates and Their
ABS. JOUR. : RZKhim., No. 23 1959, No. 83768

AUTHOR : Grzczynski, K.
INST. :-
TITLE : Production of Sodium Alginate from Seaweeds Growing in Poland

ORIG. PUB. : Przegl. wlokienn., 1958, 12, No 11, Biul.Inst. wlokienn., 10, No 8, 18

ABSTRACT : Described are methods of obtainment of two sodium alginate (I) varieties, one of low viscosity (30-100 cp.), another of high viscosity (300-700 cp.), that find application in the textile industry. The derivation of high viscosity I encounters difficulties due to a too rapid depolymerization rate of alginic acid and due to its sensitivity to temperature variations. Subsequent manufacturing steps of I include: grinding of dried seaweeds, sifting

* Processing.

CARD: 1/2

H - 97

COUNTRY :
CATEGORY :

ABS. JOUR. : RZKhim., No. 23 1959, No. 83768

AUTHOR :
INST. :
TITLE :

ORIG. PUB. :

ABSTRACT : and classifying , washing with dilute hydrochloric acid or with double-distilled water. double extraction of the ground and washed seaweeds with 5% $NaCO_3$ solution, purification of the I solution by centrifuging, bleaching with chlorine and separation of I with ethyl alcohol, drying and grinding of I product. Apparata employed in the manufacture of I should not be made of iron. It is made of acid--resistant metals, glass, wood.-- D.Bronshteyn

CARD: 2/2

Drawing roll stand for continuous steel casting

S/276/63/000/001/027/028
A006/A101

Figure.

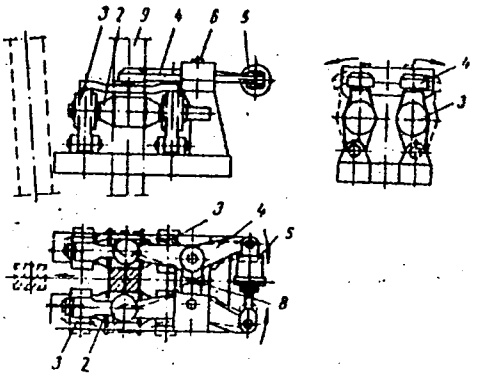

Card 2/2

GRUSZCZYNSKI, Leszek

Machines of the installation for continuous steel casting.
Problemy proj hut maszyn 12 no.6:172-178 Je '64

1. "Biprohut", Gliwice.

GRUSZCZYNSKI, Pawel; KALISZ, Jozef; MAREK, Edward; STARZYCZNY, Jerzy

New solution of feeding an Ingersol/Rand turbocompressor. Gosp paliw 11 Special issue no.(95):59 Ja '63.

1. Kopalnia Debiensko.

17

CA

Determination of lead in toothpastes. Tadeusz Gruszczyński and Elżbieta Słomińska-Czyżowa (P.Z.H., Kielce, Poland). *Roczniki Państwowego Zakładu Hig.* 1, 191-6, French summary, 196-7(1950).—Samples are dried at 550-600° and dissolved in 10% HNO_3. Sn is pptd. in this soln. and filtered off. No occlusion of Pb takes place at this point and Pb is detd. in the filtrate by using the colorimetric dithizone method. Interference of other heavy metals is prevented by addn. of citric acid and KCN. It is essential to use Pyrex ware, and to adjust the pH carefully to 8.5-10 before adding dithizone. Pb varies from 0.16 mg. % to 72 mg. %, 5 mg. % being the permissible content. The paste scraped off the inside of the tube after cutting it open has a 10 times higher Pb content than a sample squeezed out of the tube.

I. Z. Roberts

1951

GRUSZCZYNSKI, TADEUSZ

OL • 51

/Copper determination in tomato preparations. Tadeusz Gruszczyński and Janina Kniecik (Oddział Badania Żywności i Przedmiotów Użytku Filii P.Z.H., Kielce). *Roczniki Państwowego Zakładu Hig.* 2, 105-11(1951) (French summary); cf. Callan and Henderson, *C.A.* 24, 312.—The modified diethyldithiocarbamate (I) method of Cockburn and Herd (cf. *C.A.* 32, 7152[1]) was used for the detn. of Cu in tomato prepns. A 5-g. sample was dried, ashed at 700°, dissolved in 5 ml. concd. HNO_3 in 15 min., titrated with concd. NH_4OH, filtered, dild. to 100 ml. with H_2O, and treated with I; the Cu was detd. colorimetrically. L. J. Piotrowski

GRUSZCZYŃSKI, T.

POL. 61

Determination of 1,2-dichloroethane in wheat. Tadeusz Gruszczyński and Janina Kowalik (Oddział Chemii Fizjologicznej Instytutu Przemysłu Zbożowego Zakłady Mlyn. 4, 371-7(1958)).—The conten. of Cl ion was used as the basis for the detn. of the 1,2-dichloroethane content. To 75 ml. EtOH and 25 ml. H_2O in a Cu kettle add 50 g. of flour or cereal and heat very carefully for about 30 min. until 75 ml. distillate is obtained. To the distillate add 7.5 g. granular K_2CO_3, reflux for 2 hrs., dil. 1:1 with H_2O, acidify with 20 ml. concd. HNO_3, treat with 0.1N $AgNO_3$, filter on a weighed Gooch crucible, and dry to a const. wt. Also run a control on the reagents. The error was about 5%.

L. J. Piotrowski

GRUSZCZYNSKI, T

Gruszczynski, T.; Slominska-Czyzowa, E.

"Some observations concerning hygienic control of food packing." p. 103 (Roczniki, Vol. 5, No. 1, 1954, Warsaw)

SO: Monthly List of East European Accession, Library of Congress, Vol. 3, No. 6, June. 1954, Uncl.

GRUSZCZYNSKI, TADEUSZ

Analyses of the cyanide content of locally produced canned drupaceous fruits. Tadeusz Gruszczyński and Janina Kaniecik (Sanitary-Epidemiol. Sta., Kielce, Poland). *Roczniki Państwowego Zakładu Hig.* 5, 109-14(1954) (English summary).—Stewed fruits contained only occasional traces of free HCN. HCN arising from the decompn. of glucosides did not exceed 0.5 mg./100 g. stewed fruit. The observable HCN content of stewed fruits does not represent any danger to health. A. S. S.

GRUSZCZYNSKI, TADEUSZ

Critical analysis of the La Wall and Bradshaw method in Dunbar's modification for the sodium benzoate determination in foods. Tadeusz Gruszczyński and Elżbieta Słomińska-Czyżowa (Sanit. Epidemiolog. Stat., Kielcy, Poland). *Roczniki Państwowego Zakładu Hig.* 7, 277-82 (1956)(English summary).—The foods investigated were mostly jams, especially those based on the various kinds of plums, also juices and sirups with and without sugar. The method investigated as suggested (extn. of $PhCO_2H$ with $CHCl_3$, dild. with EtOH, titrated with 0.05*N* NaOH) is sufficiently simple and precise and accurate enough for checking in plants. Werner Jacobson

Med

GRUBNER, Maria; [illegible]KA-ZIELINSKA, Bogumila; GRU[illegible]SKI, Tadeusz

Unpasteurized frozen egg substance. Roczn panstw zakl hig 14 no.2:193-198 '63

1. Division of Hygiene of Feeding and Food, Voivodeship Sanitary and Epidemiological Station, Kielce.

CRUSZCZYNSKI, Tadeusz

Remarks on proper wrapping of sterilized food articles. Roczn panstw zakl hig 14 no.5:403-406 '63.

1. Viovodeship Station for Sanitation and Epedemiology, Kielce.

GRUSZCZYNSKI, W.

Static condensers and their repair. p. 16, (GOSPODARKA CIEPLNA. ENERGETYKA PRZEMYSLOWA, Vol. 1, No. 6, Dec. 1953, Warszawa, Poland)

SO: Monthly List of East European Accessions, (EEAL), LC, Vol. 4, No. 5 May 1955, Uncl.

GRUSZCZYNSKI, W.

Application of quick acting ground insulators in simplified substations. p. 156

ENERGETYKA (Ministerstwo Gornictwa i Energetyki oraz Stowarzyszenie Elektrykow Polskich) Bytom, Poland. Vol. 13, no. 6, June 1959

Monthly List of East European Accessions (EEAI) LC, Vol. 8, no. 9, September 1959
Uncl.

GRUSZCZYNSKI, A.

"Enlargement and Mechanization of the River Harbors in Connection with the Projected Development of Navigation." p. 73 (GOSPODARKA WODNA, Vol. 13, No. 2, Feb. 1953) Warszawa

SO: Monthly List of East European Accessions, Library of Congress, Vol. 2, No. 10, October 1953. Unclassified.

[illegible], S.

"The Matter of Introducing Comparable Coefficients in Transportation Services in Inland Navigation." p. 113, (GOSPODARKA WODNA, Vol. 13, No. 3, Mar. 1953. Warszawa, Poland.)

SO: Monthly List of East European Accessions, (EEAL), LC, Vol. 3, No. 12, Dec. 1954, Uncl.

GLAZUNOVA, V.K.; GRUZDEVA, A.K.; KARATAYEV, N.B.

Possibility of using rapid flotation for Zyrianovsk sulfide ores. TSvet. met. 34 no.1:7-12 Ja '61. (MIRA 17:3)

S/137/62/000/006/160/163
A057/A101

AUTHORS: Poplavko, M.V.; Manuylov, N.N.; Gruzdeva, L.A.

TITLE: Welding of titanium alloys

PERIODICAL: Referativnyy zhurnal, Metallurgiya, no. 6, 1962, 8, abstract 6E51 (V sb. "Svarka tsvetn. met. i splavov". Moscow, Oborongiz, 1961, 72 - 110)

TEXT: Problems of weldability and technology of welding of Ti and its alloys are discussed. The effect of gases and alloying elements (Al, Sn, Mn, Fe, Mo, V, Cu and others) upon the properties of weld joints is analyzed. The characteristics of weldability of alloys of the systems Ti-Al-Mn, Ti-Al-Mo, Ti-Al-V and Ti-Al-Cu are presented. The effect of small additions of B, Zr, Ce, La and Re upon the weldability of Ti-alloys is demonstrated. Recommendations for the thermal treatment of Ti-alloys are given.

V. Tarisova

[Abstracter's note: Complete translation]

Card 1/1

GRUSZECKI, L.

Panmyelophtisis in the course of neosalvarsan therapy of syphilis.
Polski tygod.lek. 5 no.49-50:1719-1723 11 Dec 50. (CLML 20:6)

2373. GRUSZECKI L. and FERSTER S. Odd. Wewnętr. 7, Szpit. Mar. Woj., Gdańsk. *Doopłucnowe wprowadzanie streptomycyny w leczeniu wysiękowego zapalenia opłucnej. Treatment of exudative pleurisy by instillation of streptomycin into the pleura PRZEGL. LEK. 1956, 12/12 (357-359)

Description of 4 cases of tuberculous pleurisy in adults treated with good result with streptomycin instilled into the pleural cavity. The necessity of beginning treatment early is stressed.

Mikułowski - Cracow

2007. GRUSZECKI L. Odd. wewnętr. Szpit. Marynarki Wojennej, Gdańsk-Wrzeszcz. Odma opłucnowa w przebiegu zapalenia płuc. Pneumothorax in the course of pneumonia POL. ARCH. MED. WEWNĘT. 1956, 26/2 (241-249) Illus. 4

In the course of pneumonia a pneumothorax as a result of rupture of the lung was created. The mediastinum was shifted by the pneumothorax. A state of severe shock developed due to infection and pneumothorax. Extensive pleural accretions, which contributed most probably to the appearance of the complication described, played a certain protective role by protecting the lung from a complete collapse and by preventing a still greater shifting of the mediastinum. The patient recovered completely.

From author's summary

POLAND / Microbiology. Hygienic Microbiology. F-4

Abs Jour : Ref Zhur - Biol., No 20, 1958, No. 90843

Author : Gruszecki, Ludwik; Ulewicz, Kazimierz; Szutowicz, Waclaw
Inst : Not given
Title : Food Poisoning Caused by Salmonella enteritidis and Escherichia coli 055B5

Orig Pub : Przegl. epidemiol., 1957, 11, No 3, 245-252 (Polish; res. Russ., Eng.)

Abstract : A massive food poisoning is described in an isolated group which consisted of 400 young males living under the same conditions and eating at one dining room. 87 of them became ill 18 - 24 hours after dinner, and 32 in 36 - 48 hours. Clinical symptoms were considerably weaker in the second group who became ill. S. enteritidis was isolated from the stools of patients in 26 cases, Esch. coli 055B5 in 14, and both types of microbes in 12. There was a 60%

Card 1/2

POLAND / Microbiology. Hygienic Microbiology. F-4

Abs Jour : Ref Zhur - Biol., No 20, 1958, No. 90843

mortality of mice inoculated internally with each of the isolated types of microbes, and 100% with inoculation of a mixed culture of these microbes. A specimen of food was not tested. One carrier of S. enteritidis was detected among the dining room personnel. The illness was caused, in the opinion of the authors, by codfish, the source of contamination of which remained unexplained. The fish was prepared the day before, it was fried in relatively large pieces, and it was not fried again before serving. The bacteria retained within the thick pieces could have multiplied during storage in the warm and moist compartment and later brought about the food poisoning infection. -- M. A. Gruzman

Card 2/2

GRUSZECKI, Ludwik; KALINOWSKI, Miroslaw

Chronic anerythremic myelosis. Polski tygod. lek. 12 no.38:1462-1465 16 Sept 57.

1. (Z Oddzialu Chorob Wewnetrznych Szpitala Marynarki Wojennej).
(ANEMIE, LEUKOERYTHROBLASTIC, case reports, anerythremic myelosis (Pol))

MEYER, Jerzy; GRUSZECKI, Ludwik

Chorio-epithelioma of mediastinum in man. Polskie arch. med. wewn. 27 no.2:267-274 1957.

1. Z pracowni Anatomopatologicznej i Oddz. Wewn. 7 szpitala Marynarki Wojennej Konsultanci: prof. dr. nauk med. W. Czarnocki i prof. dr. med. S. Wszelaki. Adres autorow: Gdansk-Oliwa, Szpital Marynarki Wojennej.

(CHORIOCARCINOMA, case reports
mediastinum, metastatic (Pol))
(MEDIASTINUM, neoplasms
choriocarcinoma, metastatic (Pol))

GRUSZECKI, Ludwik, MAYER, Jerzy.

Neurilemmoma of the stomach (Schwannoma). Polski tygod. lek. 13 no.10 359-362 10 Mar 58

1. Z oddzialu wewnetrznego I Pracowni Anatomo-Patologicznej Szpitala Marynarki Wojennej. Konsultanci: prof. St. Wszelaki i prof. W. Czarnocki

(STOMACH NEOPLASMS, case reports
schwannoma (Pol))
(NEURILEMMOMA, case reports
schwannoma of stomach (Pol))

GRUSZECKI, Ludwik; ZEBRYK, Czeslaw; SADKIEWICZ, Adam

A case of diabetic polyneuropathy. Polski tygod. lek. 16 no.39: 1501-1503 25 S '61.

1. Z Oddzialu Chorob Wewnetrznych Szpitala Marynarki Wojennej w Gdansku.

(DIABETES MELLITUS compl)
(POLYNEURITIS etiol)

GRUSZECKI, Ludwik; JANUSZKIEWICZ, Ligia

Value of the investigation of transaminases in internal diseases. Polskie arch. med. wewn. 31 no.6:797-805 '61.

1. Z Oddzialu wewnetrznego S.M.W.

(TRANSAMINASES metab)

GRUSZECKI, Ludwik

Current problems of the syndrome of hemorrhagic thrombocytosis with notes on a case. Pol. arch. med. wewn. 32 no.9:1175-1182 '62.

1. Z Oddzialu Wewnetrznego Szpitala Marynarki Wojennej.
(THROMBOCYTOSIS)

POLAND

GRUSZECKI, L. and SADKIEWICZ A.; Department of Internal Diseases, Seventh Naval Hospital, Gdiw (Z oddziału Chorob Wewnetrznych 7 Szpitala Marynarki Wojennej w Gdiwie).

"Lipodystrophia Progressiva Barraquer-Simons. Case Report."

Warsaw, Polski Tygodnik Lekarski, Vol 17, No 52, Dec 24 62, pp 2038-2040

Abstract: [Authors' English summary modified] A woman aged 35 with progressive lipodystrophy is reported. From the age of 25 the patient grew fat in the lower part of the body and thin in the upper part. This disease is characterised by slow symmetric atrophy of the adipose tissue of the upper and normal amount or even increase of the fatty tissue of the lower part of the body. The course of the disease is slow at first and morbid entity is more observed in women than in men. It is suggested that these phenomena are related to the changes in the hypothalamohypophyseal system. This article contains two photographs of the patient and five references to Polish publications.

1/1